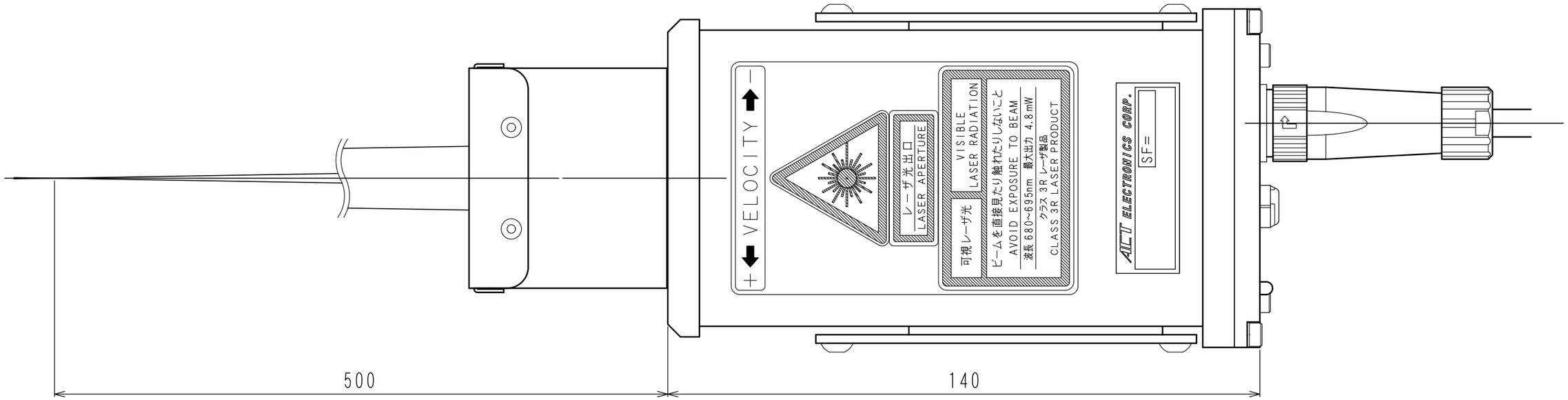

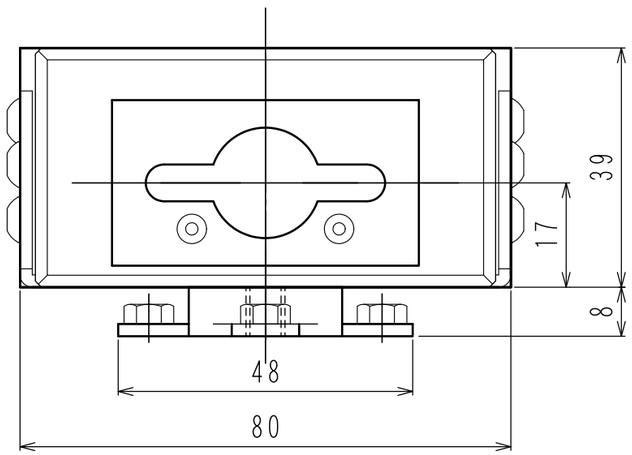

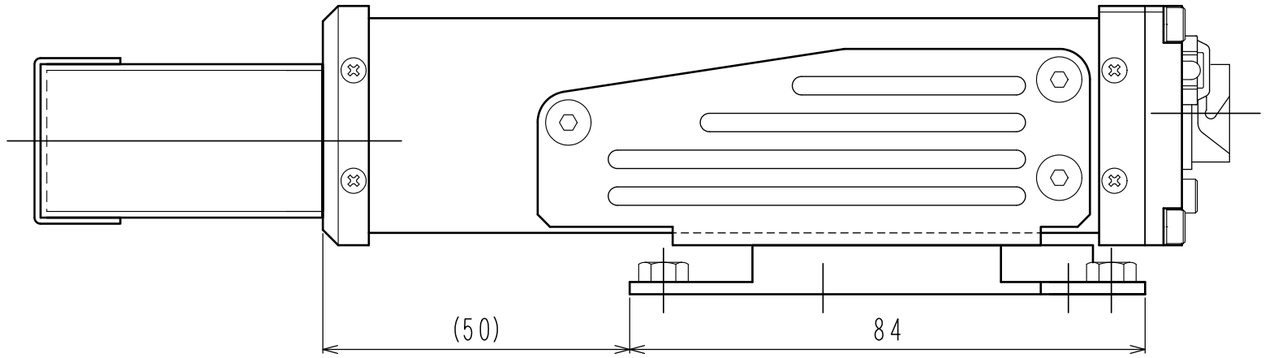

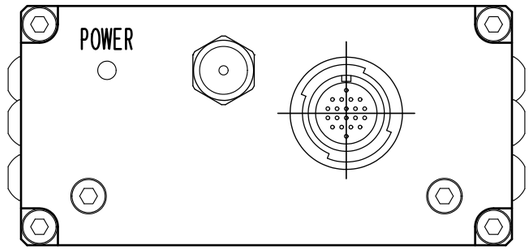

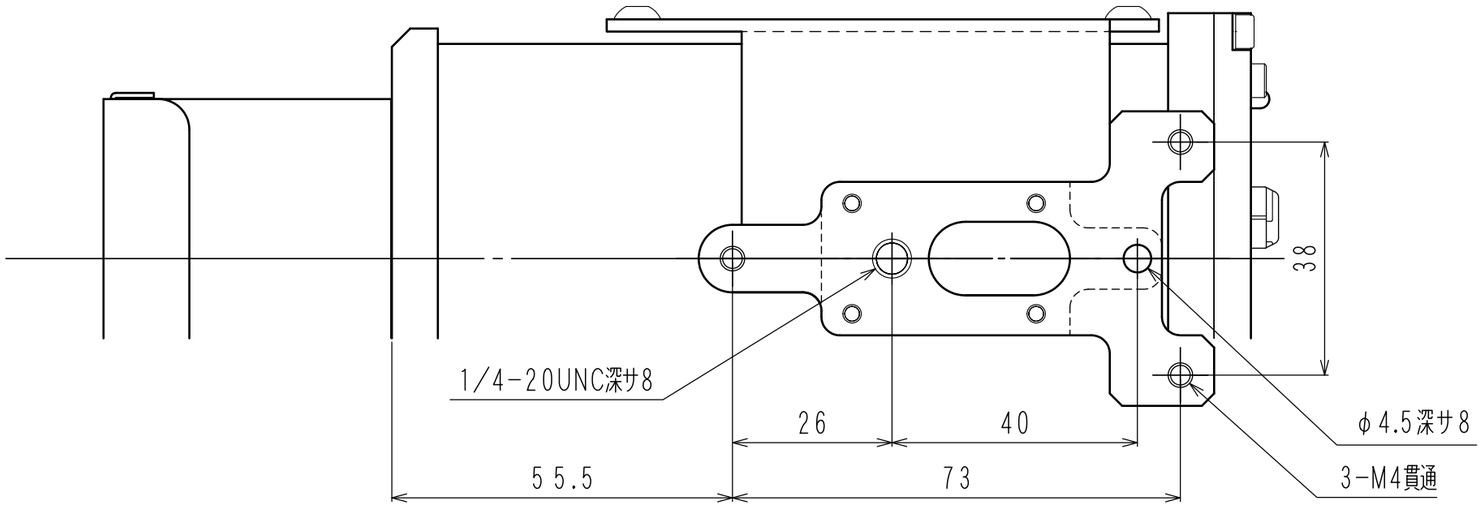

MODEL 1622N5

ACT ELECTRONICS CORP.