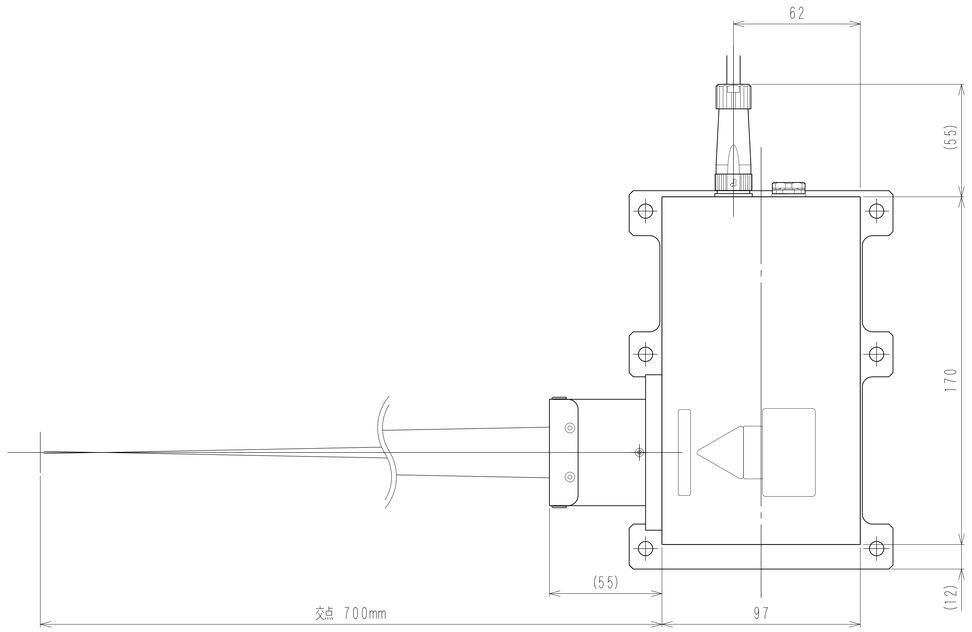

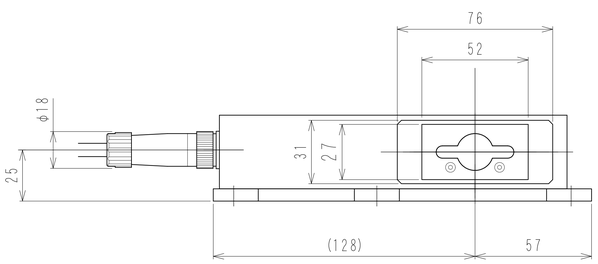

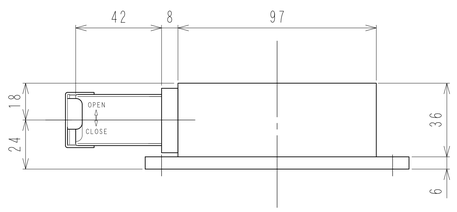

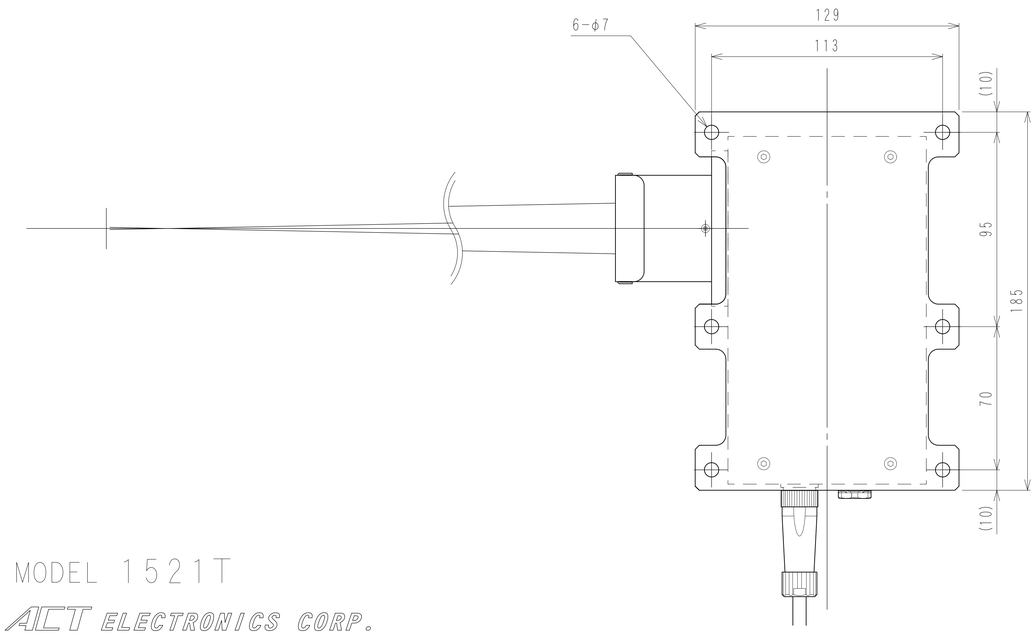

MODEL 1521T

ACT ELECTRONICS CORP.