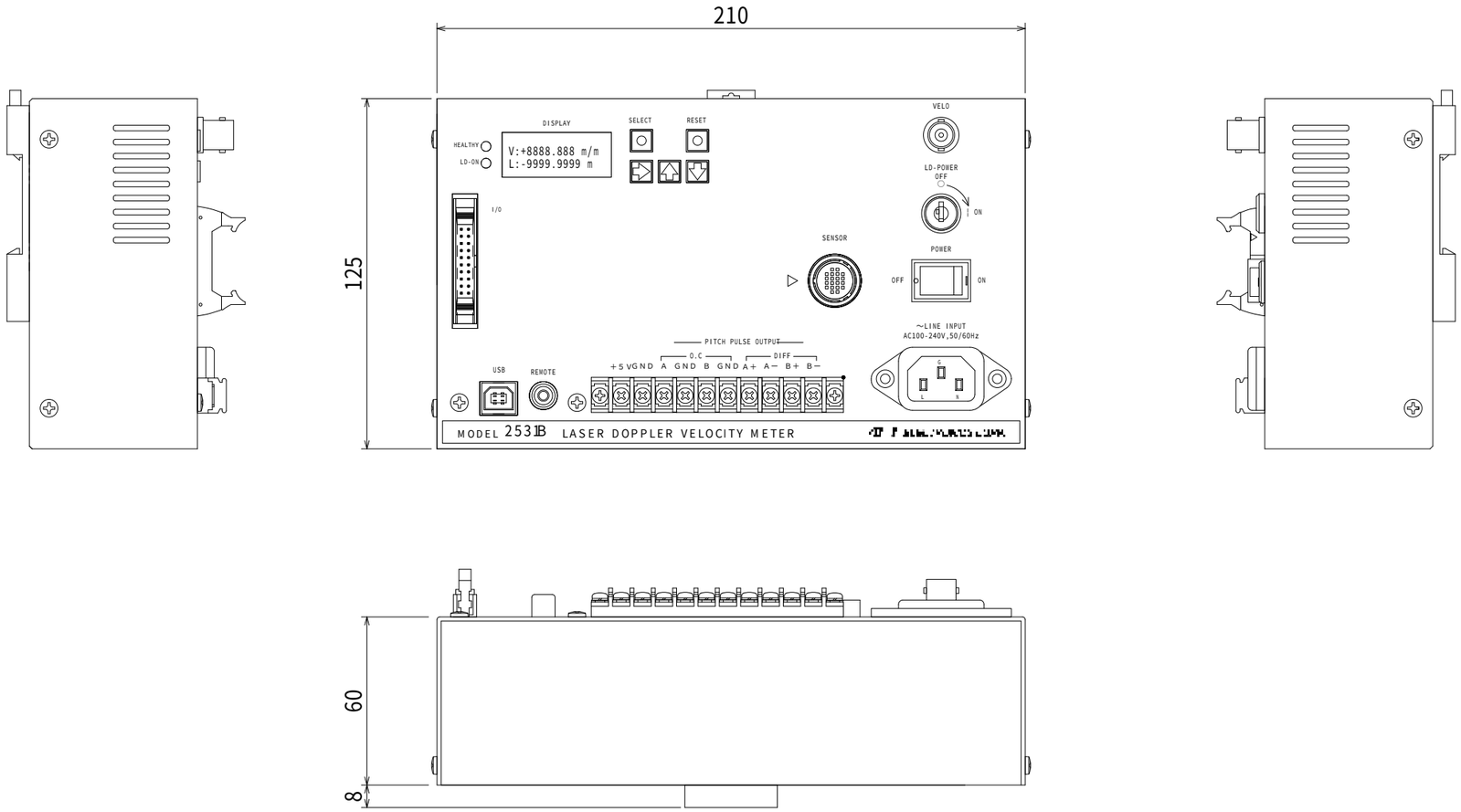
210
125
60
8
DISPLAY
V:+8888.888 m/m
L:-9999.9999 m
HEALTHY
LD-ON
SELECT
RESET
VELO
LD-POWER
OFF
ON
I/O
SENSOR
POWER
OFF
ON
~LINE INPUT
AC100-240V,50/60Hz
PITCH PULSE OUTPUT
O.C
DIFF
+5V GND A GND B GND A+ A− B+ B−
USB
REMOTE
MODEL 2531B LASER DOPPLER VELOCITY METER

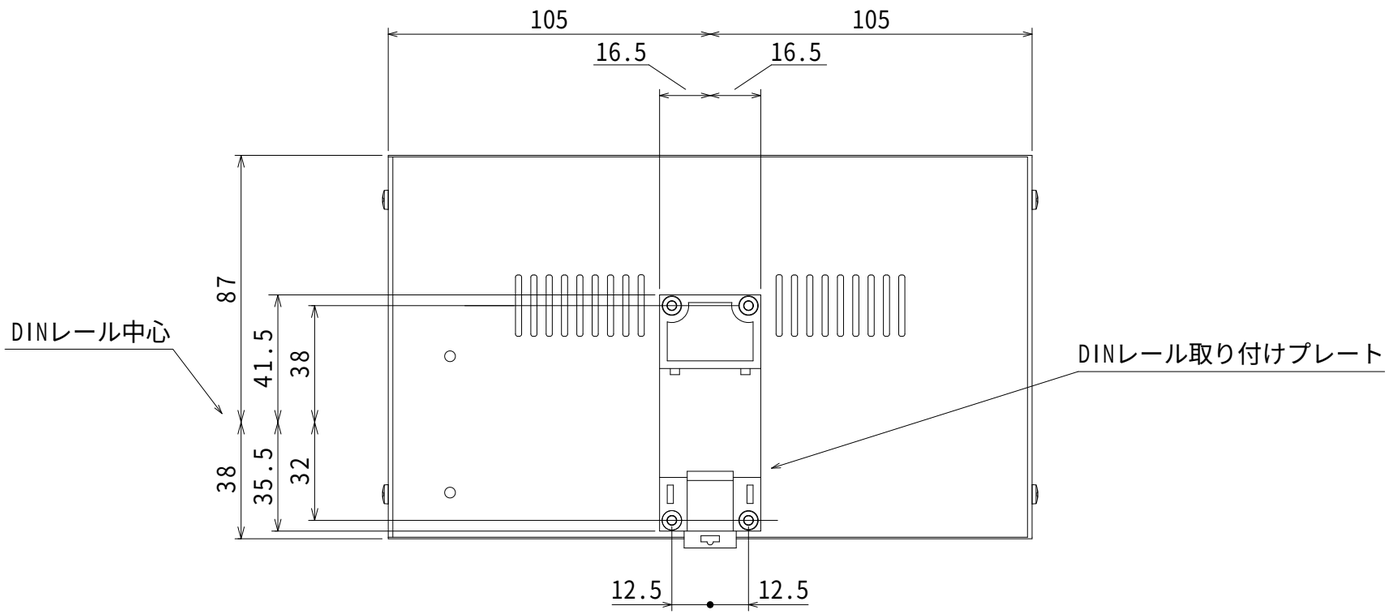
105
105
16.5
16.5
87
41.5
38
38
35.5
32
DINレール中心
DINレール取り付けプレート
12.5
12.5